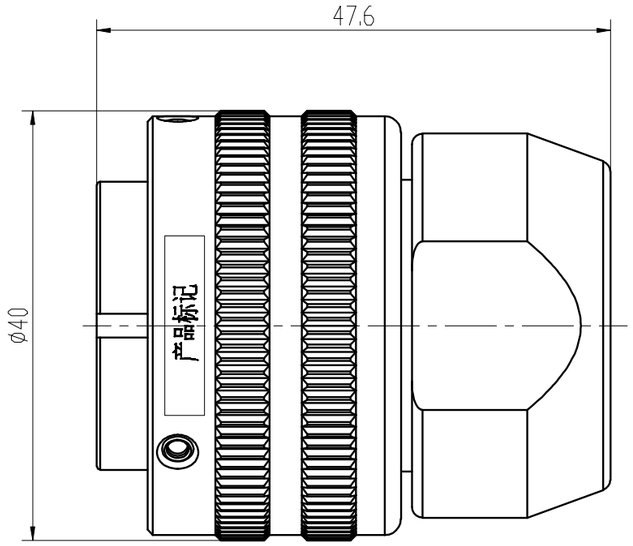

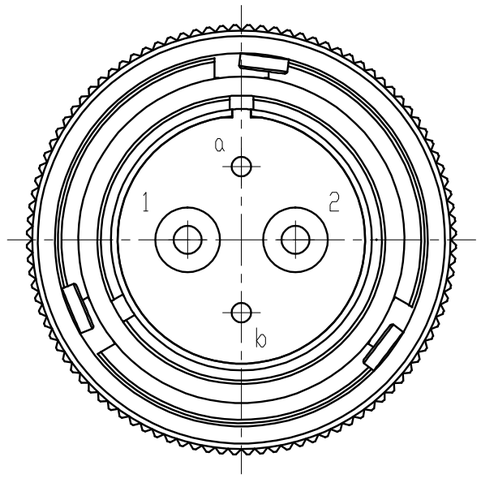

Specifications
1、Temperature : -55℃ ~+125℃
2、Rated Current: 80A
3、Withstand Voltage: 2000V DC
4、Rated Voltage：1000V DC
5、Ingress Protection: IP67
6、Mechanical Life: 500 times

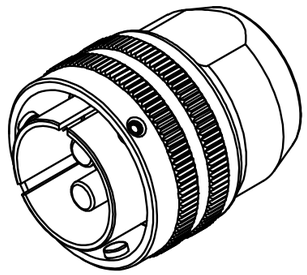

KRX 10 - 2X06 TP- 0100- B- 16
① ② ③ ④ ⑤ ⑥ ⑦

① Master code: KRX ：KRX
② Product series： 10
③Pin size: 2X06--2 , Pin Size: Φ6
④ Type: TP is plug & pin, ZS is receptacle & hole, TS is plug & hole, ZP is receptacle & pin
⑤Plug type: 0100-Straight outgoing wire Plug;
⑥Position code, color and angle: R is red, 90°， B is black, 120°
⑦Wire range ：8--8.0 mm2、 10--10.0mm2、 16--16.0 mm2

			KRX10-2X06TP-0100-B-16	KRX-GZ

格式1

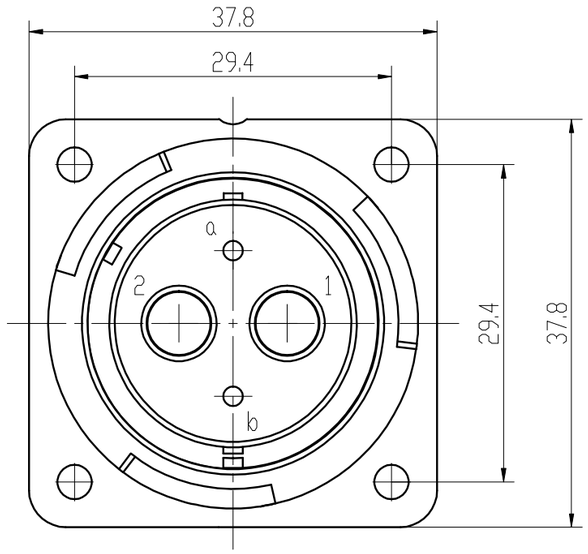

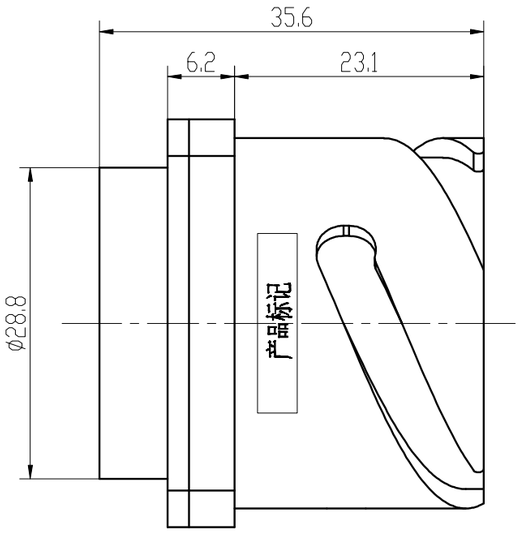

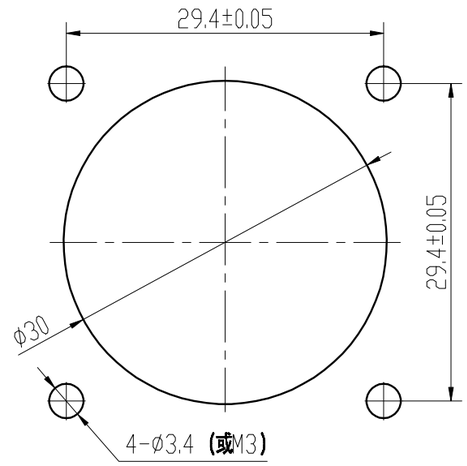

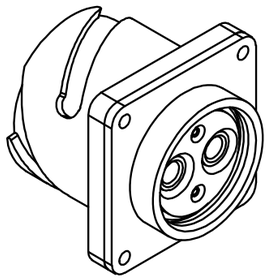

Specifications
1、Temperature : -55°C ~+125°C
2、Rated Current: 80A
3、Withstand Voltage: 2000V DC
4、Rated Voltage：1000V DC
5、Ingress Protection: IP67
6、Mechanical Life: 500 times

KRX 10 -2X06 ZS- B- 16
① ② ③ ④ ⑤ ⑥
① Master code: KRX ：KRX
② Product series： 10
③Pin size: 2X06--2 , Pin Size: Φ6
④ Type: TP is plug & pin, ZS is receptacle & hole, TS is plug & hole, ZP is receptacle & pin
⑤Position code, color and angle: R is red, 90°， B is black, 120°
⑥Wire range ：8--8.0 mm2、 10--10.0mm2、 16--16.0 mm2

				KRX10-2X06ZS-B-16	KRX-GZ