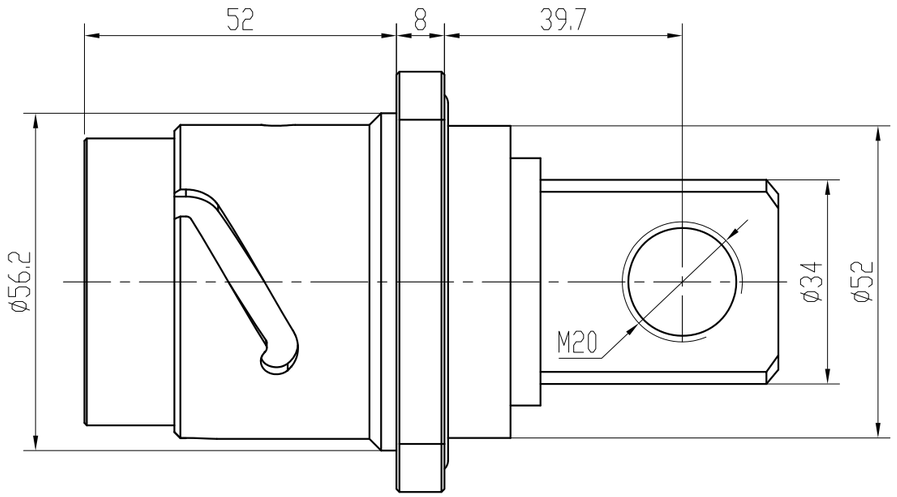

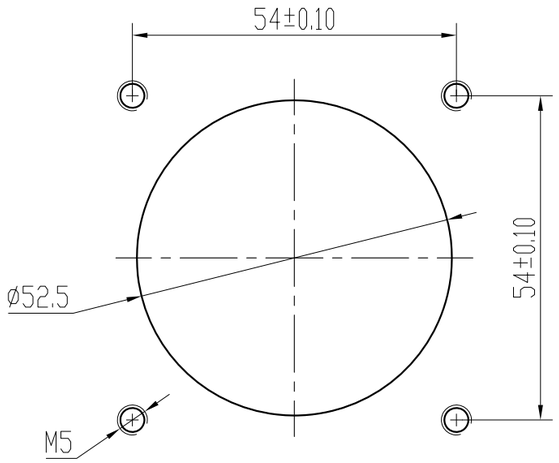

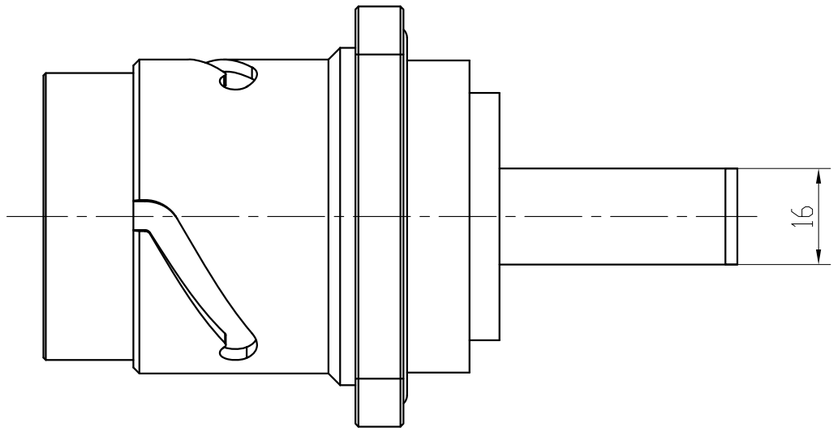

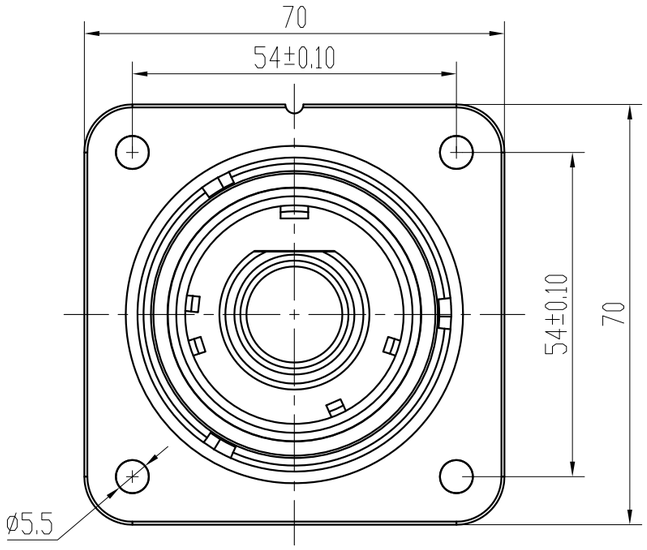

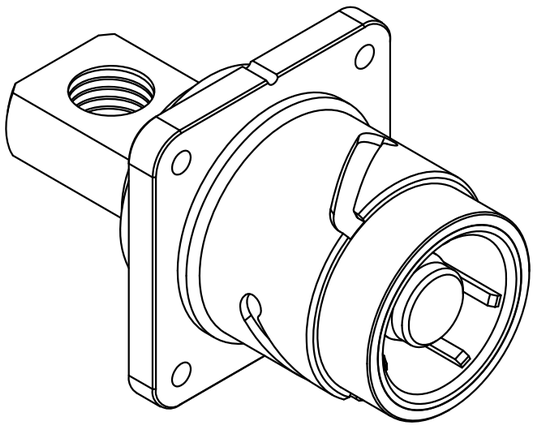

Product number	KRX05✱-1X20ZJ-✱✱✱
Positions	X、Y、U、V、W
Temperature	-55℃∽+125℃
Copper row connection hole specification	M20
Rated current	1000A
Ingress Protection	IP67
WithstandVoltage	8000V DC
Insulation resistance	5000MΩ

			KRX05✱-1X20ZJ-✱✱✱	KRX-GZ

格式1

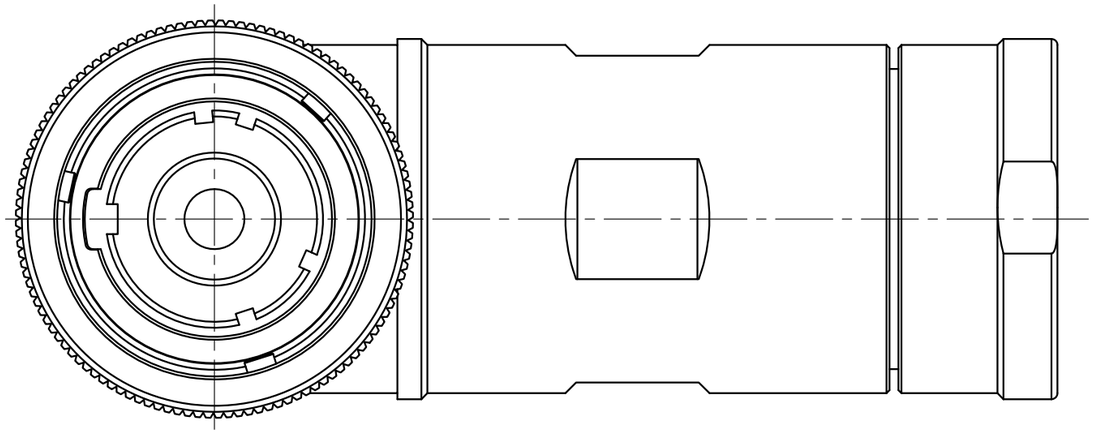

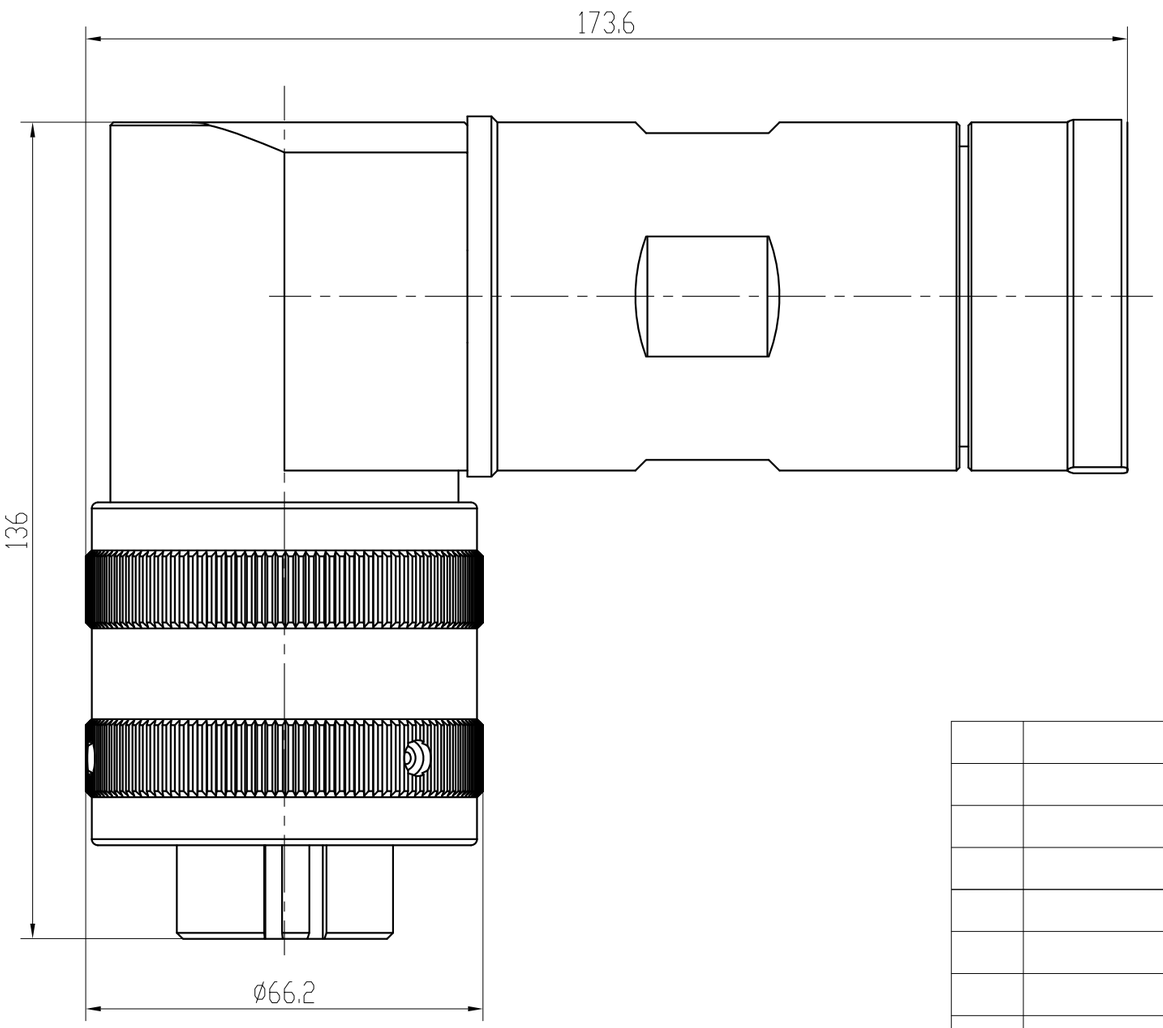

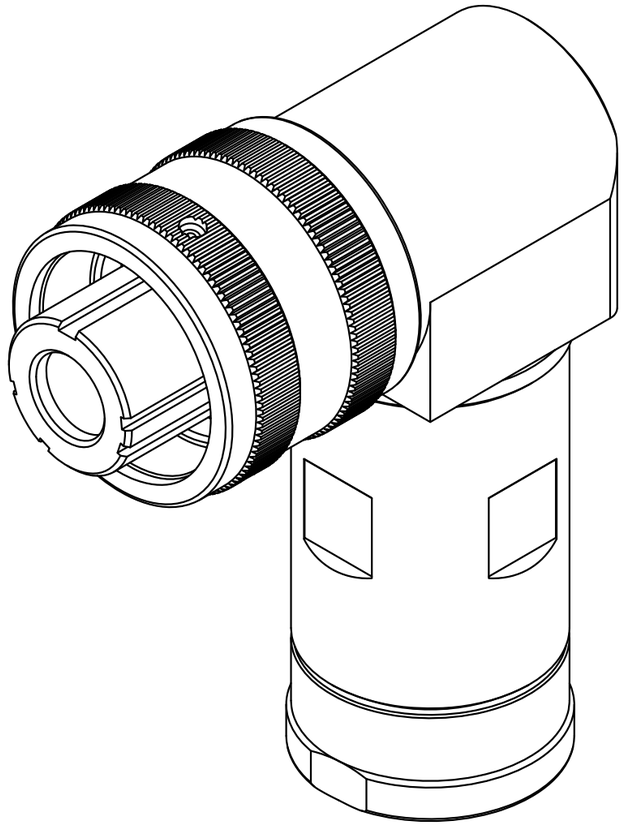

Product number	KRX05*-1X20TK-90-***
Multiple key options	X、Y、U、V、W
Temperature	-55℃～+125℃
Pin/hole Diameter	ø20
Wire Range	150、185、240、300、400
Rated current	1000A
Ingress Protection	IP67
Withstand Voltage	8000V DC
Insulation resistance	5000MΩ

			KRX05*-1X20TK-90-***	KRX-GZ