格式

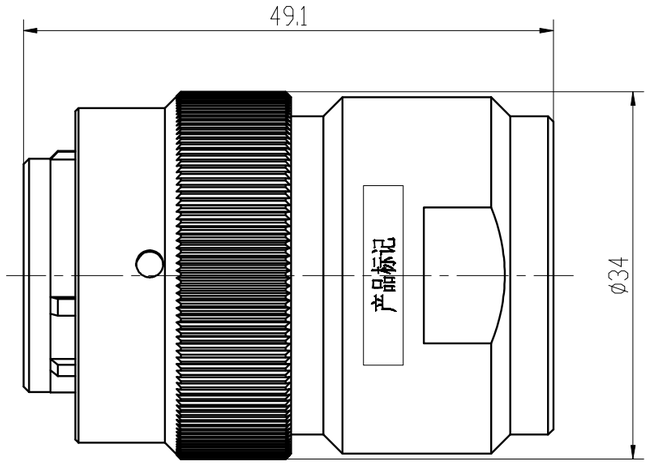

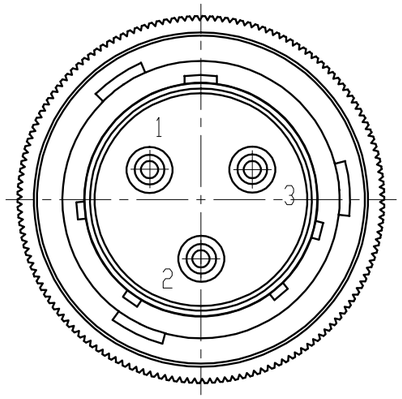

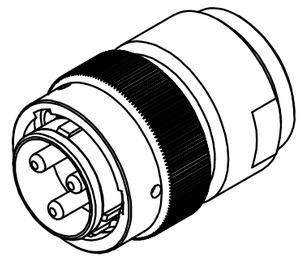

Specifications
1、Temperature : -55°C ~+125°C
2、Rated Current: 40A
3、Withstand Voltage: 2000V DC
4、Rated Voltage：1000V DC
5、Ingress Protection: IP67
6、Mechanical Life: 500 times

			KRX15-03TJ-0100-***	KRX-GZ

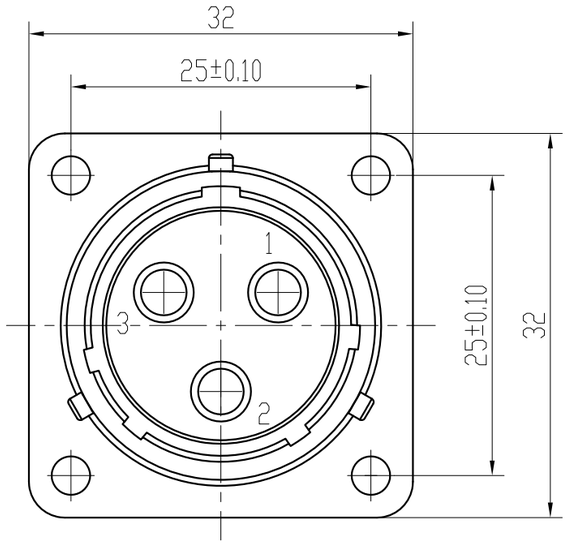

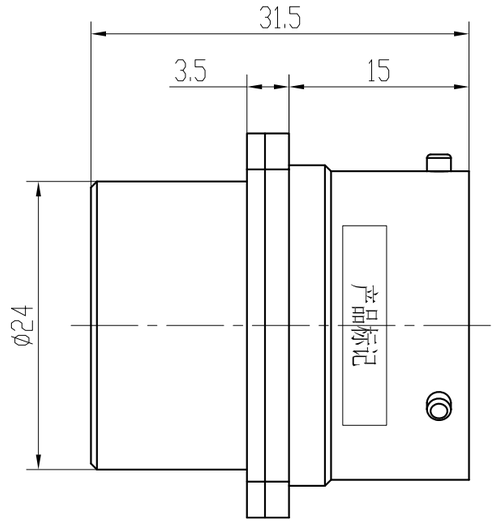

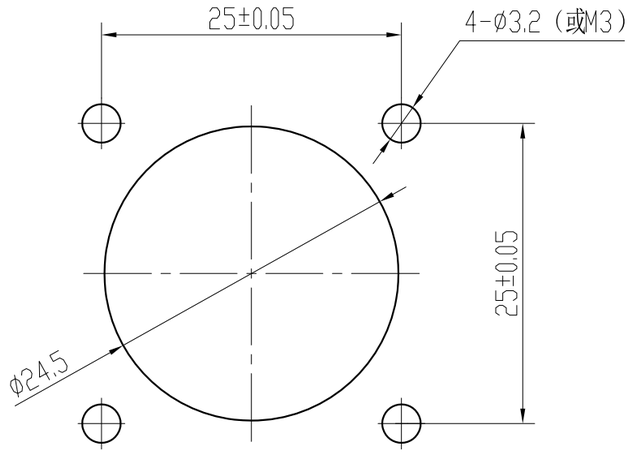

建议的安装开孔尺寸

KRX 15A -03 ZK - 040
① ② ③ ④ ⑤

① Master Code: KRX
② Product Series: 15A
③ Position: 03 is 3 pin
④ Type: TJ is plug & pin, ZK is receptacle & pin, TK is plug & hole, ZJ is receptacle & pin
⑤ Wire range: 025--2.5mm2, 040--4.0mm2, 060--6.0mm2

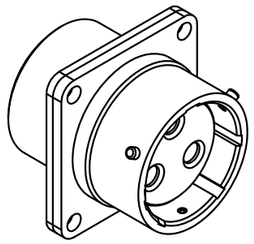

Specifications
1、Temperature : -55℃ ~+125℃
2、Rated Current: 40A
3、Withstand Voltage: 2000V DC
4、Rated Voltage：1000V DC
5、Ingress Protection: IP67
6、Mechanical Life: 500 times

				KRX15A-03ZK-***	KRX-GZ