格式1

表面处理	SD

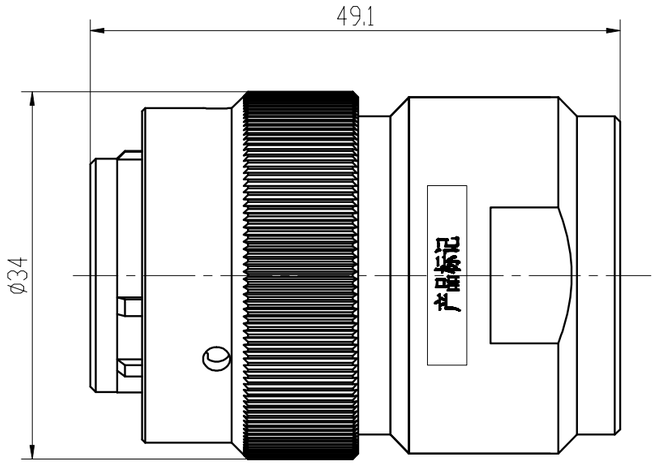

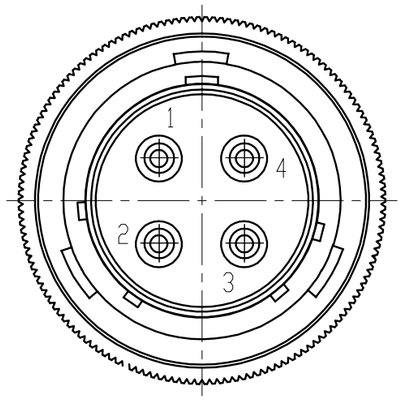

KRX 15 -04 TJ - 0100- 040
① ② ③ ④ ⑤ ⑥

① Master Code: KRX
② Product Series: 15
③ Position: 04 is 4 pin
④ Type: TJ is plug & pin, ZK is receptacle & pin, TK is plug & hole, ZJ is receptacle & pin
⑤ Plug type: 0100-Straight outgoing wire Plug; 0190-90° outgoing wire Plug
⑥ Wire range: 025--2.5mm2, 040--4.0mm2, 060--6.0mm2

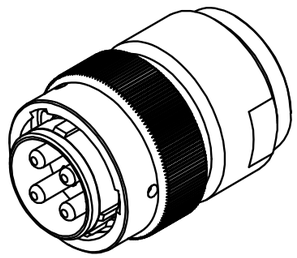

Specifications
1、Temperature : -55℃ ~+125℃
2、Rated Current: 40A
3、Withstand Voltage: 2000V DC
4、Rated Voltage：1000V DC
5、Ingress Protection: IP67
6、Mechanical Life: 500 times

				KRX15-04TJ-0100-***	KRX-GZ

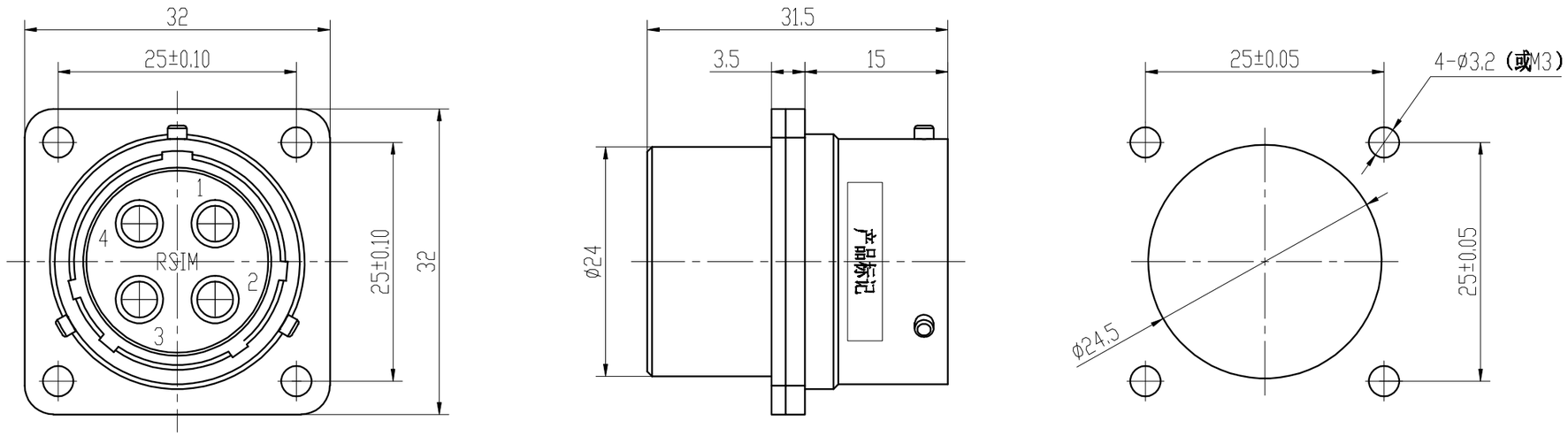

KRX 15A -04 ZK - 040
① ② ③ ④ ⑤

① Master Code: KRX
② Product Series: 15A
③ Position: 04 is 4 pin
④ Type: TJ is plug & pin, ZK is receptacle & pin, TK is plug & hole, ZJ is receptacle & pin
⑤ Wire range: 025--2.5mm2, 040--4.0mm2, 060--6.0mm2

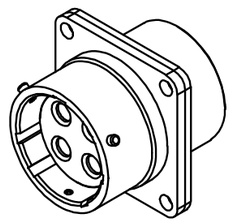

Specifications
1、Temperature : -55℃ ~+125℃
2、Rated Current: 40A
3、Withstand Voltage: 2000V DC
4、Rated Voltage：1000V DC
5、Ingress Protection: IP67
6、Mechanical Life: 500 times

				KRX15A-04ZK-***	KRX-GZ