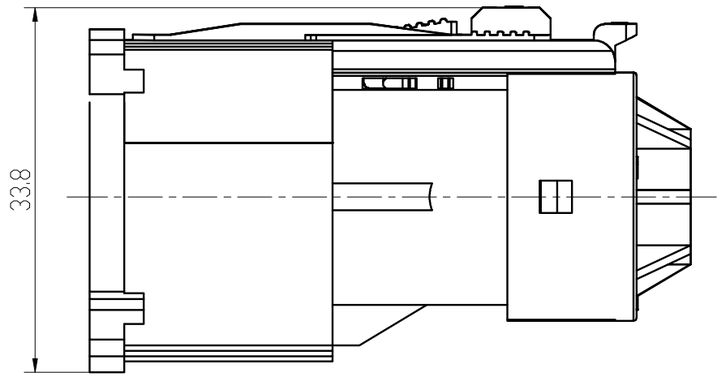

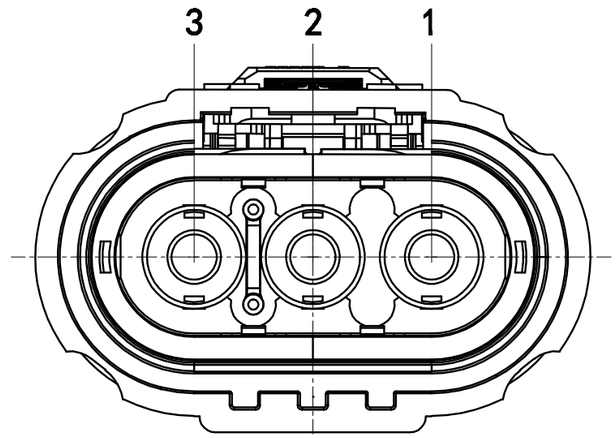

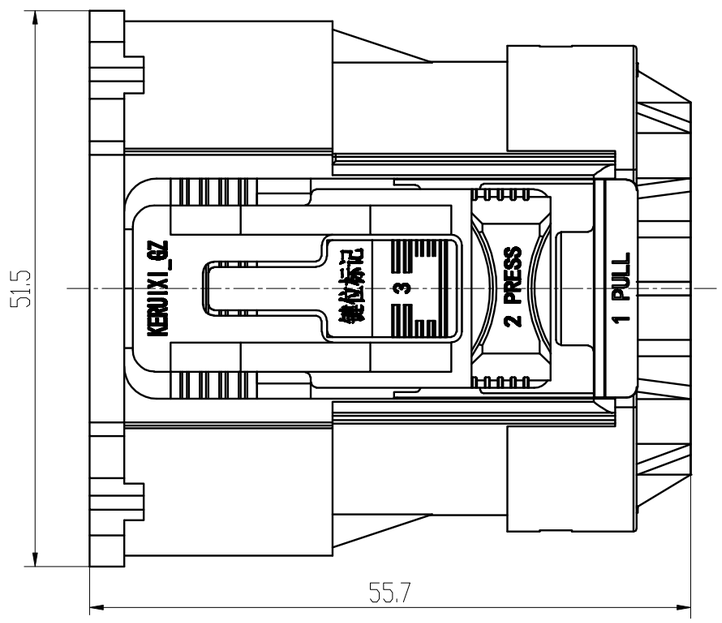

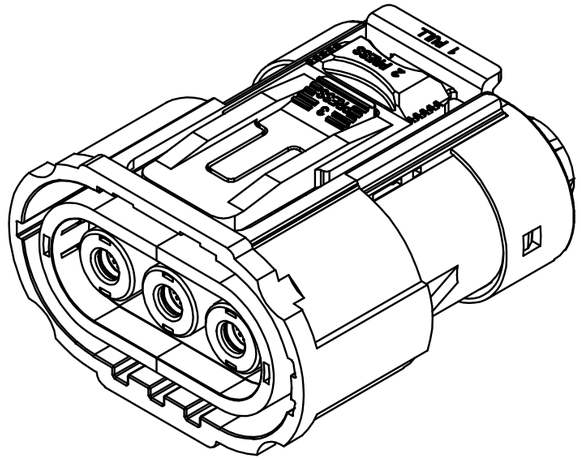

Specifications
1、Temperature : -55℃ ~+125℃
2、Rated Current: 60A
3、Withstand Voltage: 3000V DC
4、Ingress Protection: IP67
5、Mechanical Life: 500 times
6、Shielded Function:Yes
7、HVIL Function：Yes

KRX 16 X -3X04 TK- 025- S -01
① ② ③ ④ ⑤ ⑥ ⑦ ⑧
① Master Code: KRX
② Product Series: 16
③ Position: X, Y, U, V
④ 3Pin: 3X04--3 pin, Pin/hole Diameter: Φ4
⑤ Connector type: TK--Plug mounting hole
⑥ Wire range: 025--2.5mm2, 040--4.0mm2, 060--6.0mm2, 100--10.0mm2
⑦ Shield Function: S--shield, No mark--unshielded
⑧ HVIL: 00--No HVIL 01--Included HVIL

				KRX16*-3X04TK-***	KRX-GZ

格式

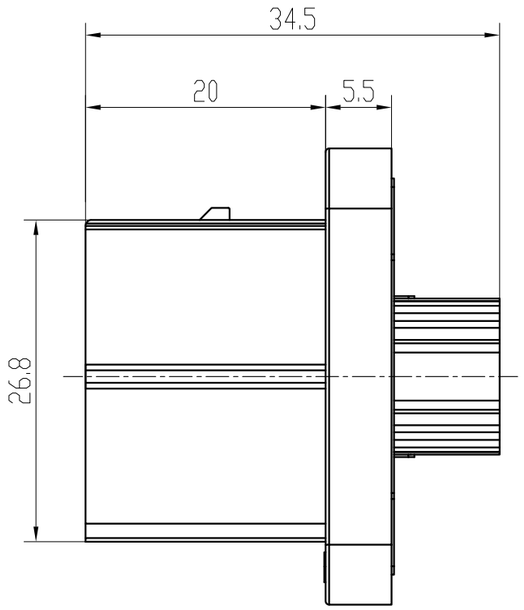

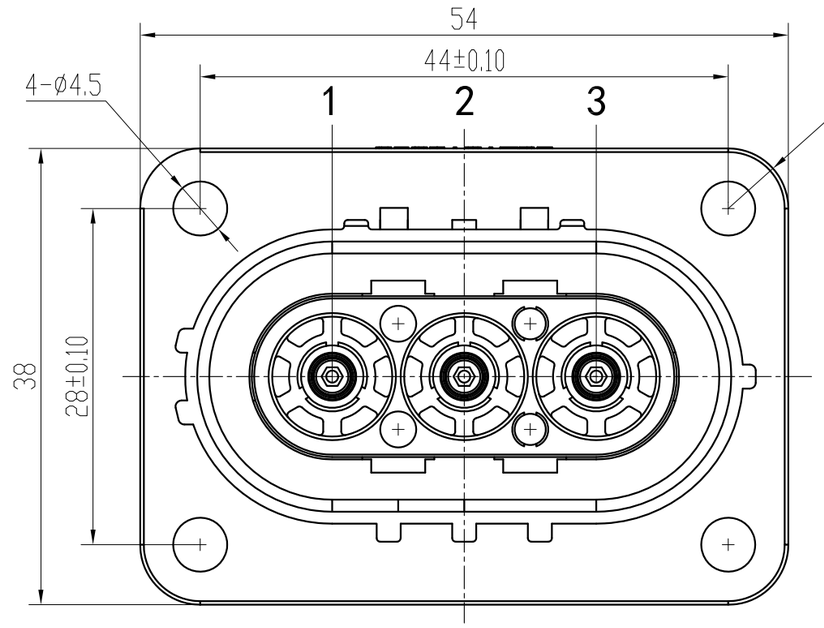

安装开孔尺寸

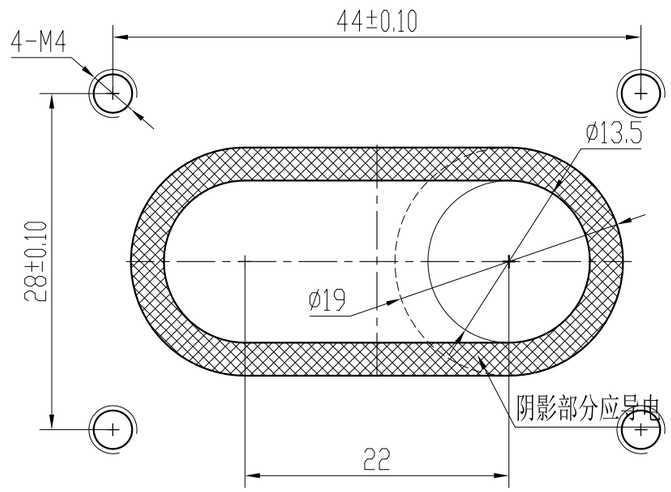

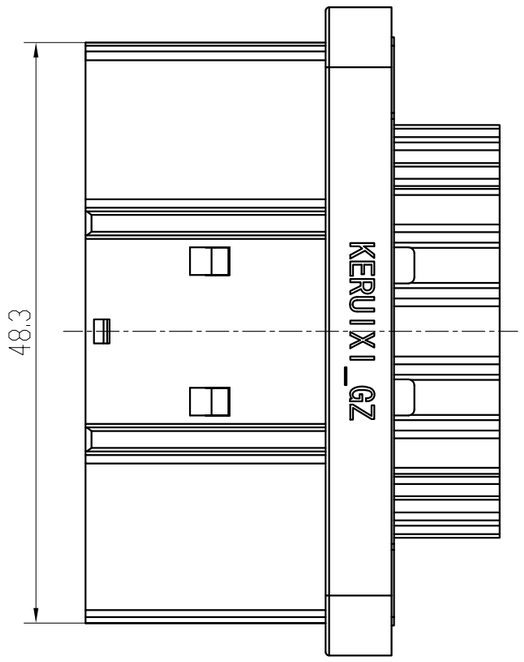

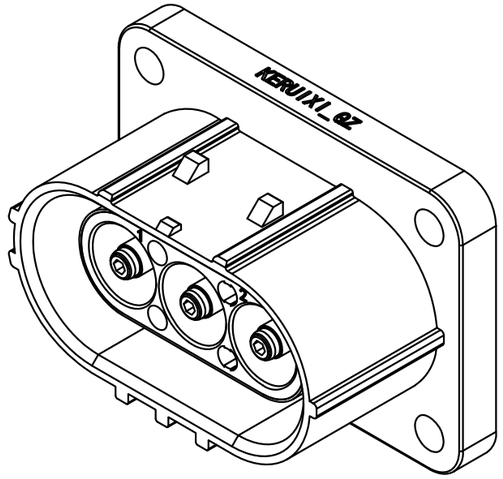

KRX 16 X -3X04 ZJ- 025- S -01
① ② ③ ④ ⑤ ⑥ ⑦ ⑧

① Master Code: KRX
② Product Series: 16
③ Position: X, Y, U, V
④ 3Pin: 3X04--3 pin, Pin/hole Diameter: Φ4
⑤ Connector type: ZJ--Sokect mounting pin
⑥ Wire range: 025--2.5mm2, 040--4.0mm2, 060--6.0mm2, 100--10.0mm2
⑦ Shield Function: S--shield, No mark--unshielded
⑧ HVIL: 00--No HVIL 01--Included HVIL

Specifications
1、Temperature : -55℃ ~+125℃
2、Rated Current: 60A
3、Withstand Voltage: 3000V DC
4、Ingress Protection: IP67
5、Mechanical Life: 500 times
6、Shielded Function:Yes
7、HVIL Function：Yes

			KRX16*-3X04ZJ-***	KRX-GZ