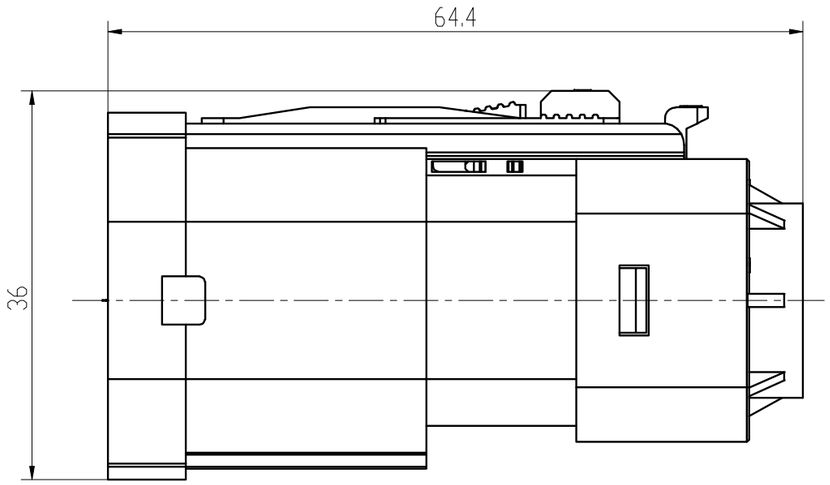

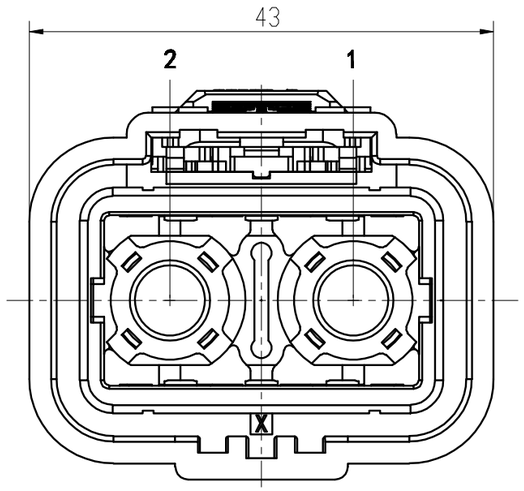

KRX 17 X -2X06 TK 025- S - 01
① ② ③ ④ ⑤ ⑥ ⑦ ⑧

① Master Code: KRX
② Product Series: 17
③ Position: X, Y, U, V
④ 2Pin: 2X06--2 pin, Pin/hole Diameter: Φ6
⑤ Connector Type: TK--Plug mounting hole
⑥ Wire range: 16--16mm2, 25--25mm2
⑦ Shield Function: S--shield, No mark-- unshielded
⑧ HVIL: 00--No HVIL 01--Included HVIL

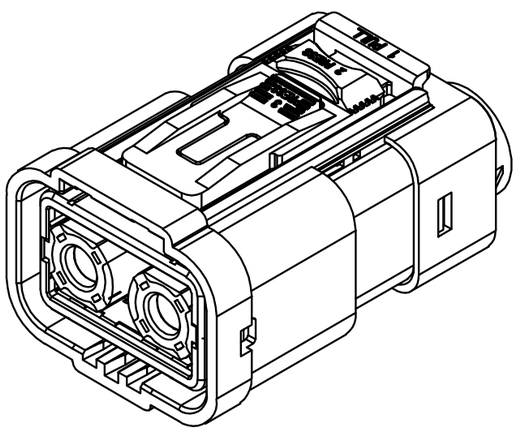

Specifications
1、Temperature : -55℃ ~+125℃
2、Rated Current: 120A
3、Withstand Voltage: 3000V DC
4、Ingress Protection: IP67
5、Mechanical Life: 500 times
6、Shielded Function:Yes
7、HVIL Function：Yes

				KRX17*-2X06TK-**-*-**	KRX-GZ

格式1

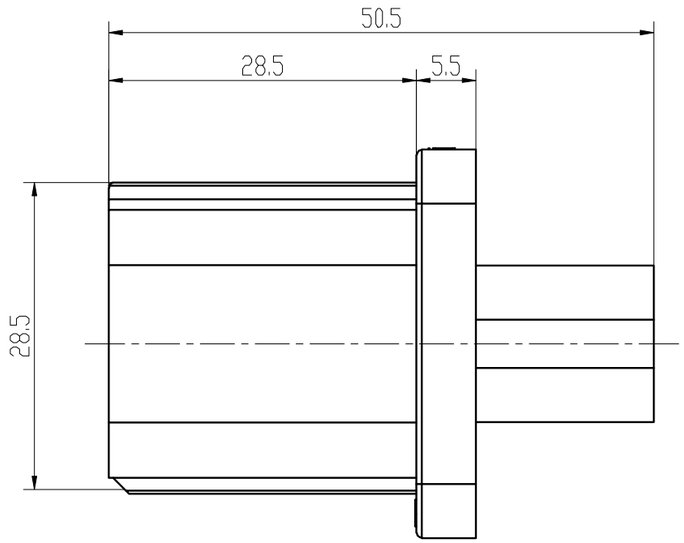

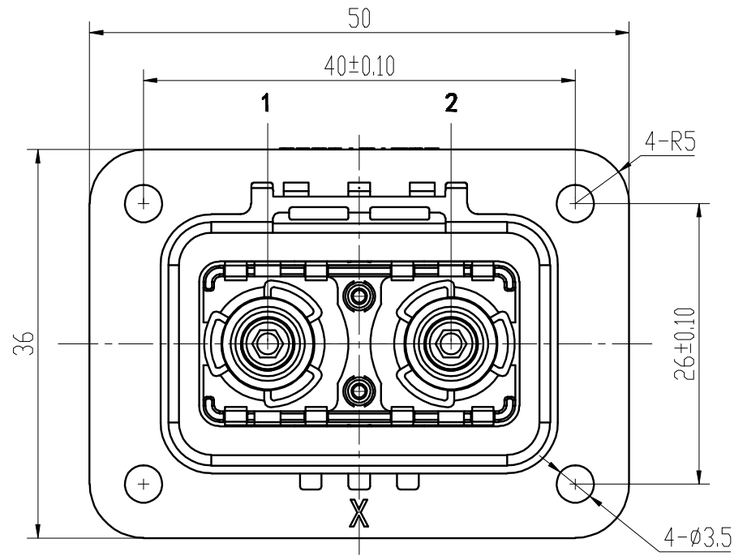

安装开孔尺寸

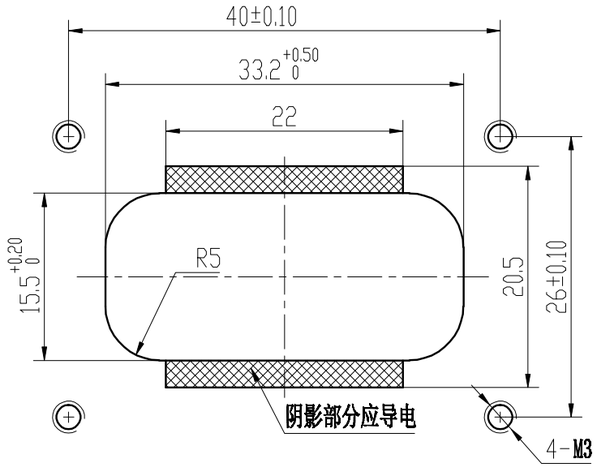

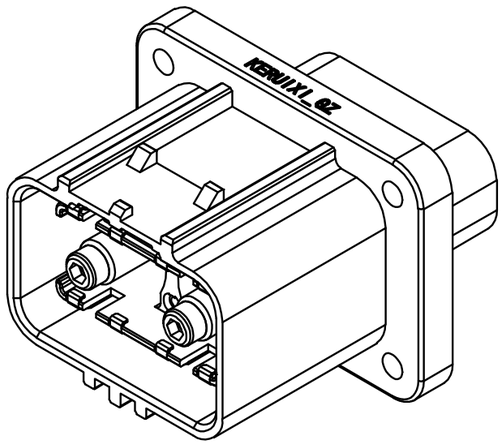

KRX 17 X -2X06 ZJ 025- S - 01
① ② ③ ④ ⑤ ⑥ ⑦ ⑧

① Master Code: KRX
② Product Series: 17
③ Position: X, Y, U, V
④ 2Pin: 2X06--2 pin, Pin/hole Diameter: Φ6
⑤ Connector Type: ZJ-- Receptacle mounting Pin
⑥ Wire range: 16--16mm2, 25--25mm2
⑦ Shield Function: S--shield, No mark-- unshielded
⑧ HVIL: 00--No HVIL 01--Included HVIL

Specifications
1、Temperature : -55°C ~+125°C
2、Rated Current: 120A
3、Withstand Voltage: 3000V DC
4、Ingress Protection: IP67
5、Mechanical Life: 500 times
6、Shielded Function:Yes
7、HVIL Function：Yes

				KRX17*-2X06ZJ-**-*-**	KRX-GZ