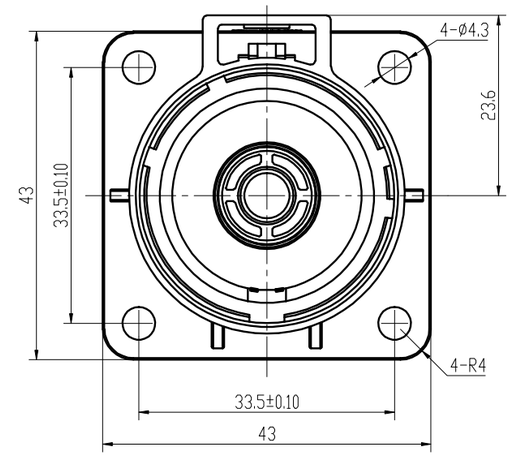

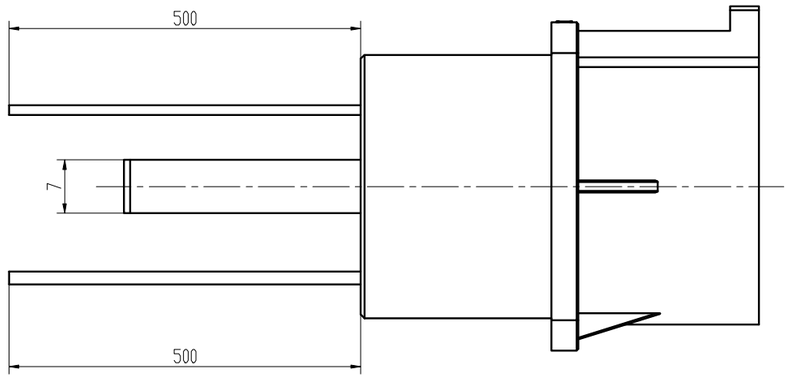

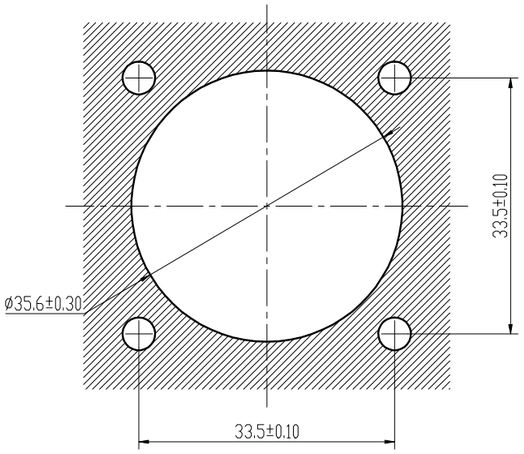

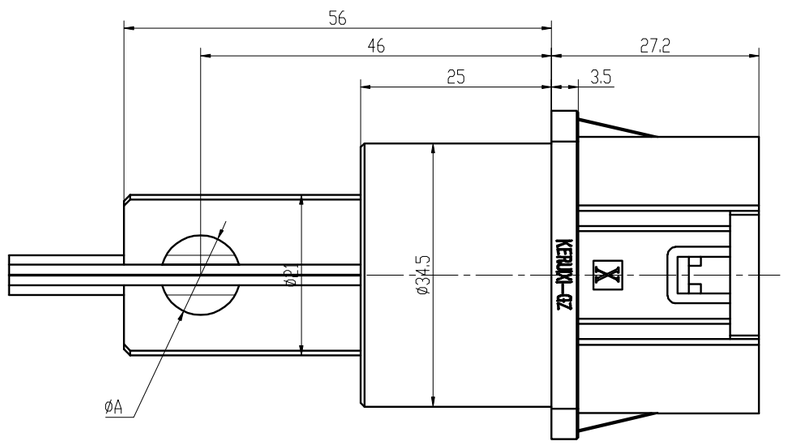

KRX 00 X - 50 0 -10M10 - T
① ② ③ ④ ⑤ ⑥ ⑦

① Master code: KRX
② Product type: 00 is receptacle
③ Positions: X, Y, U, V, W
④ Rated current: 50--500A
⑤ HVIL: 1 is Yes, 0 is No
⑥ Copper row connection hole specification: 10D10, 10M10 , is optional
⑦ Temperature sensor: T is Yes, No mark is No

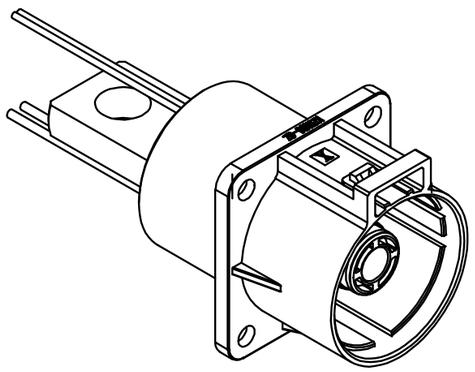

Specifications
1、Temperature : -55°C ~+125°C
2、Rated Current: 500A
3、Withstand Voltage: 5000V DC
4、Rated Voltage：1500V DC
5、Ingress Protection: IP67
6、Mechanical Life: 500 times
7、Shielded Function:Yes
8、HVIL Function：Yes

				KRX00-50-**-*	KRX_GZ
				Socket	

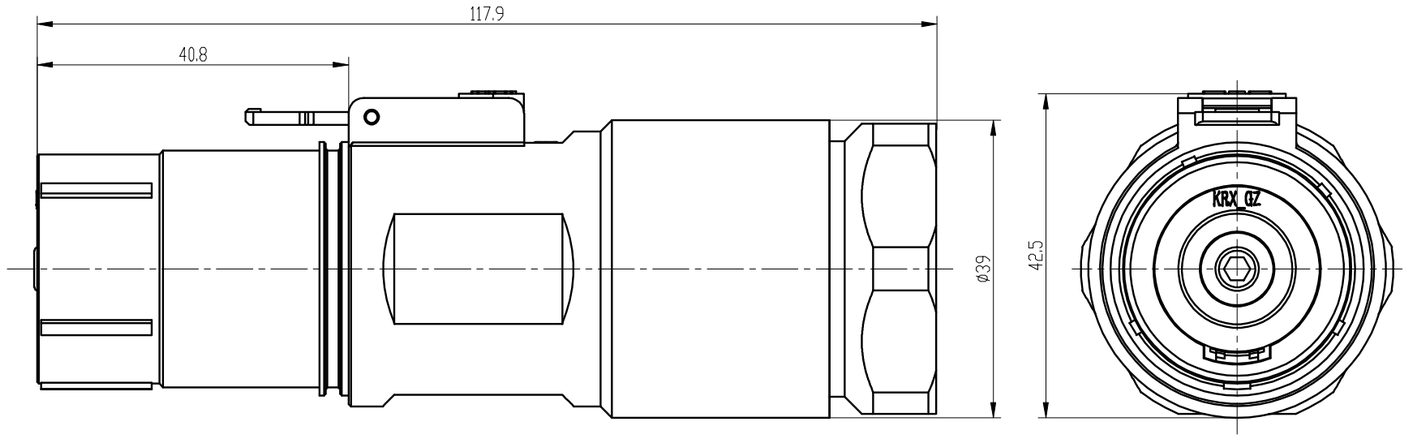

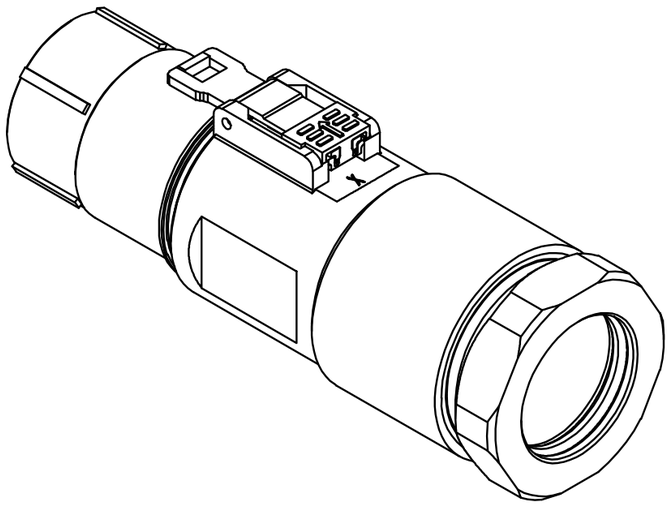

KRX 18 X - 50 0 -95
① ② ③ ④⑤ ⑥

① Master code: KRX
② Product type: 18 is 180° straight plug, 28 is 90° plug
③ Positions: X, Y, U, V, W
④ Rated current: 50--500A
⑤ HVIL: 1 is Yes, 0 is No
⑥Wire Range: 95 mm2, 120 mm2, 135 mm2 .150mm2

Specifications
1、Temperature : -55℃ ~+125℃
2、Rated Current: 500A
3、Withstand Voltage: 5000V DC
4、Rated Voltage：1500V DC
5、Ingress Protection: IP67
6、Mechanical Life: 500 times
7、Shielded Function:Yes
8、HVIL Function：Yes

				KRX18*-50*-**	KRX_GZ

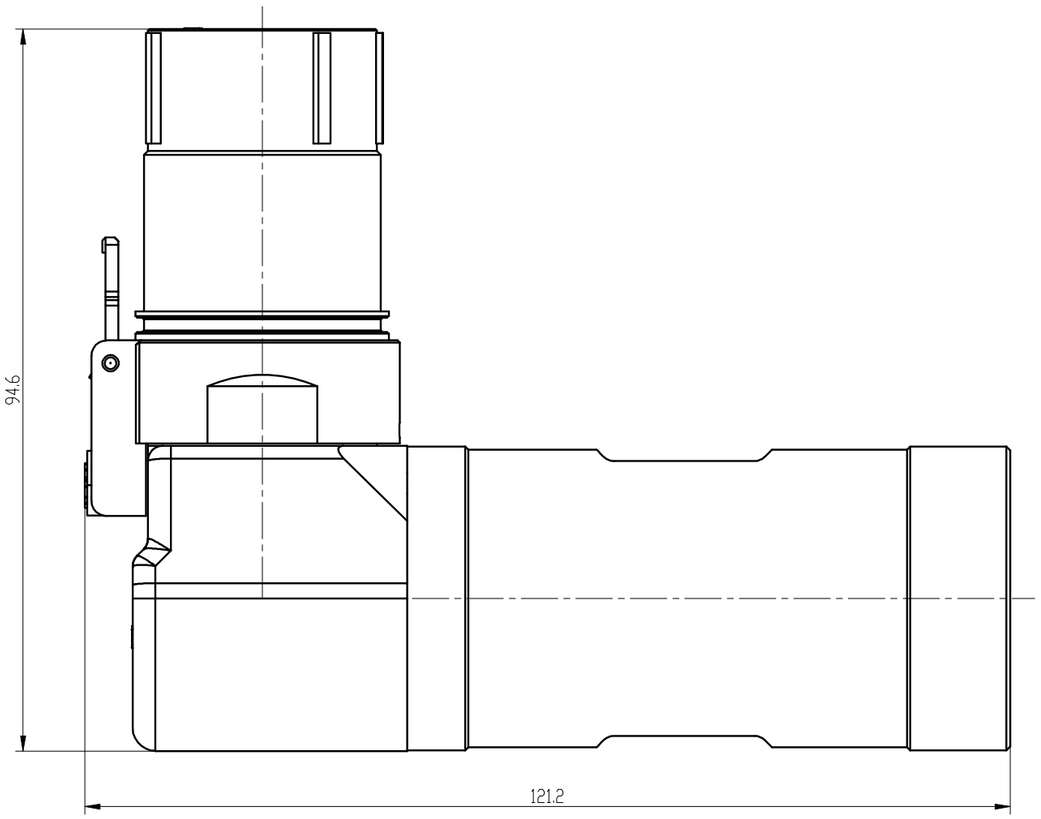

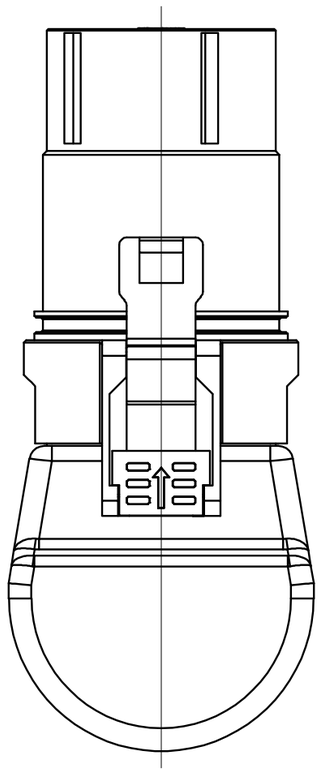

KRX 28 X - 50 0 -95
① ② ③ ④ ⑤ ⑥

① Master code: KRX
② Product type: 18 is 180° straight plug, 28 is 90° plug
③ Positions: X, Y, U, V, W
④ Rated current: 50--500A
⑤ HVIL: 1 is Yes, 0 is No
⑥Wire Range: 95 mm2, 120 mm2, 135 mm2 .150mm2

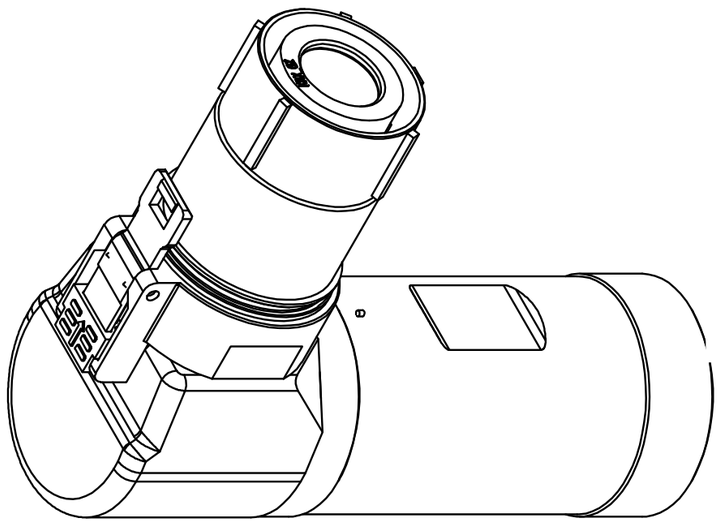

Specifications
1、Temperature : -55℃ ~+125℃
2、Rated Current: 500A
3、Withstand Voltage: 5000V DC
4、Rated Voltage：1500V DC
5、Ingress Protection: IP67
6、Mechanical Life: 500 times
7、Shielded Function:Yes
8、HVIL Function：Yes

				KRX28*-50*-**	KRX-GZ